A look at some driver circuits:

Our flexible little microcontrollers have demonstrated their abilities for handling inputs and outputs very dependably when using what is called “logic level” current. (So named because it is used to switch a “logical” 0 to a 1 (low to high), or 1 to 0 in semiconductor material.) This is just what we need in general to read the state of a sensor, send a pulse-width positioning signal to a servo motor, or light an LED.

Next let’s look at the problem of bigger loads. (This includes closing 12 volt relays, turning on DC motors and actuating 24 volt solenoids.) What we need to do is make a circuit which can use a logic level current to drive a much bigger load. The most typical component for this purpose is the transistor. In bipolar transistors like the one pictured below, the pressure at the base of the transistor is used to switch the current flowing from its collector out its emitter. (Note: Power supplies for external loads like in this 12v example, all need to have their negative lead (aka. ground) connected with ground of the chip.)

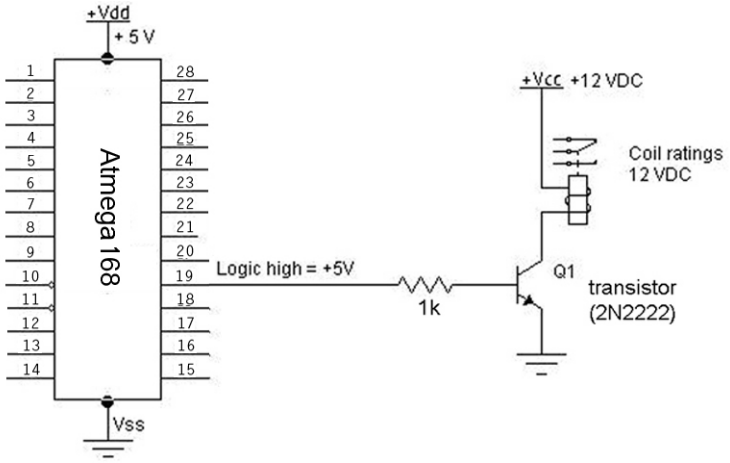

Another electrical component that’s especially useful for protecting the microcontroller from electrical surges that could cause current to flow in the wrong direction is called an “optoisolator.” It is so named because the circuit with input current flowing from the chip isn’t actually connected physically to the wires of the load circuit (is “optically isolated”), and instead uses the light from a tiny internal infrared LED to switch the load circuit .

NTE 3047/8 optoisolator

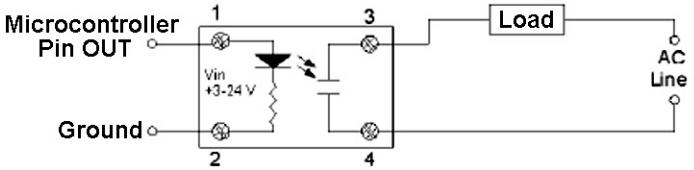

And as you might imagine, there are also chips specifically designed to function as drivers for large loads in stepper motors and lighting instruments. The example below (ULN2803A) is called an “Inverted output” driver chip because when a high voltage (logical 1) is at an input pin, it provides a path to ground so the load at the corresponding output pin is at ground.